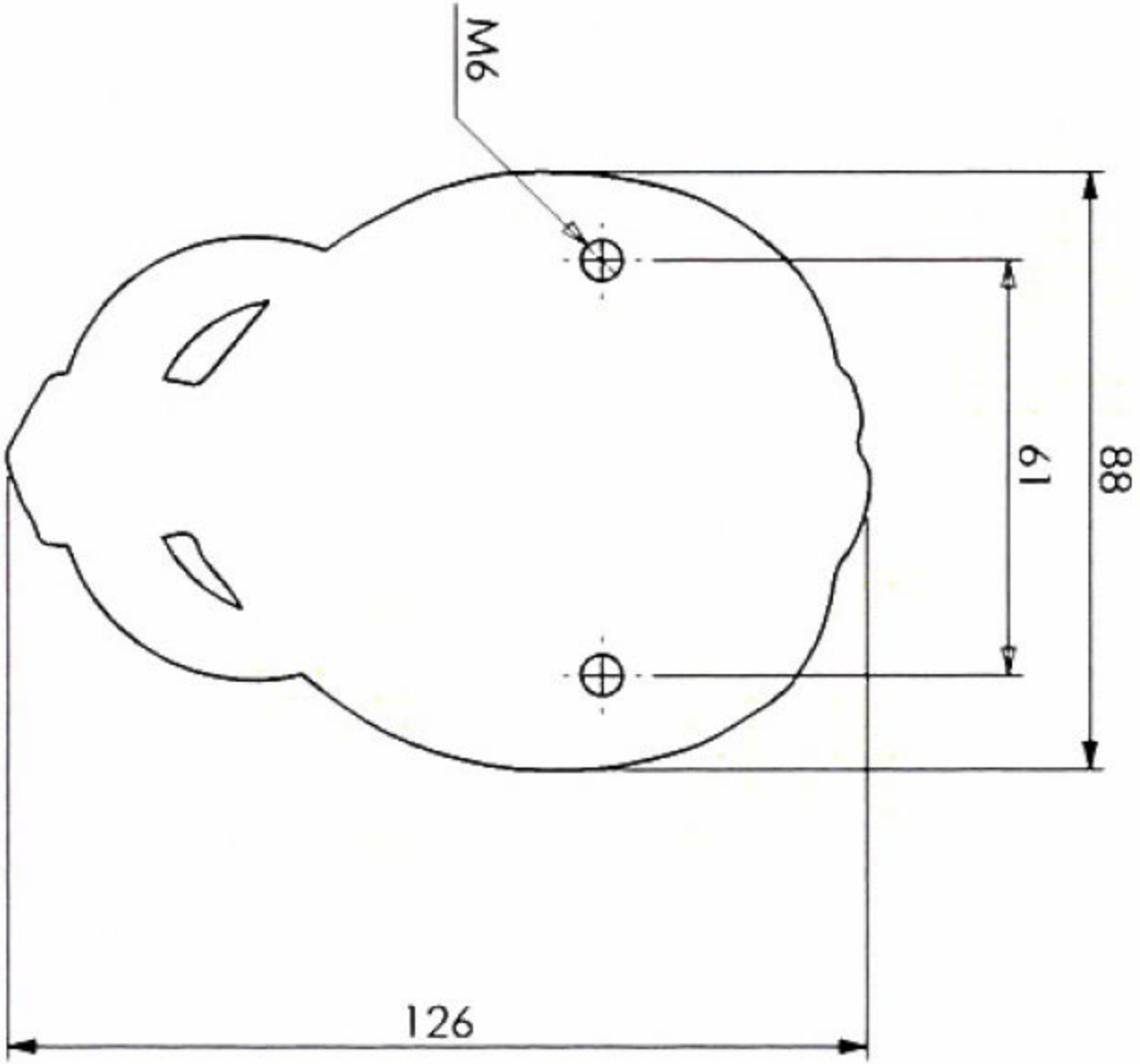6" Lions Head