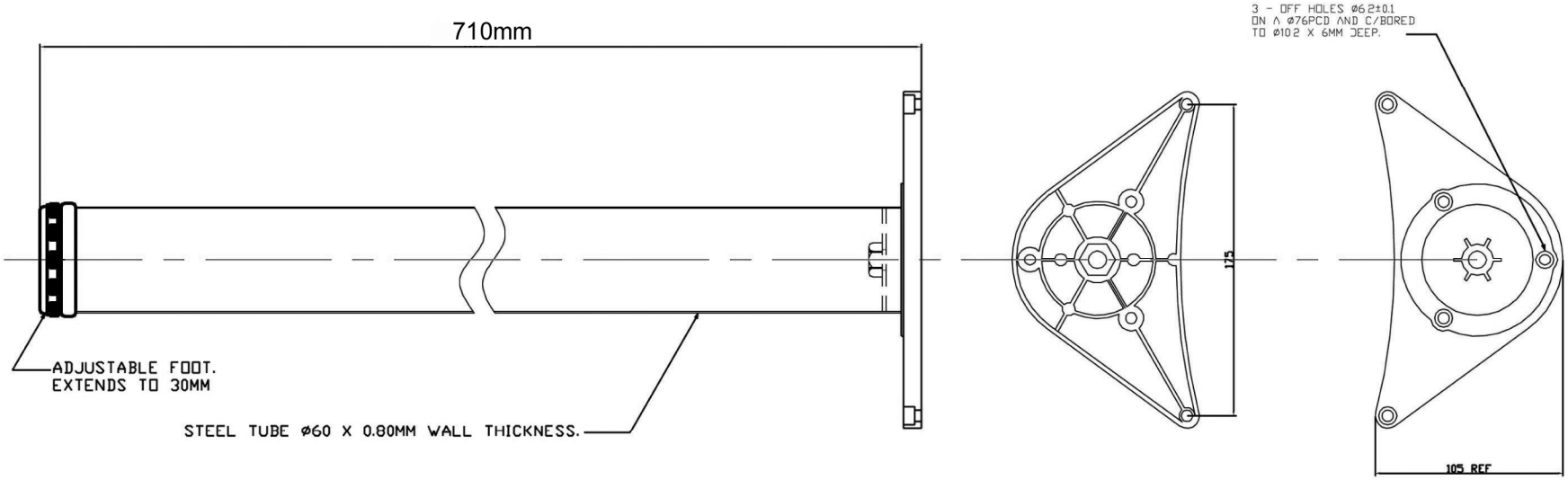

ROTHLEY LTD.

60MM X 710MM TABLE LEG - BOLT LOCK PLATE

ISSUE 'A'