PRODUCT CODE 91436

1" (25.4mm)

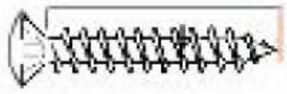

x8

gauge 6 (3.5mm)

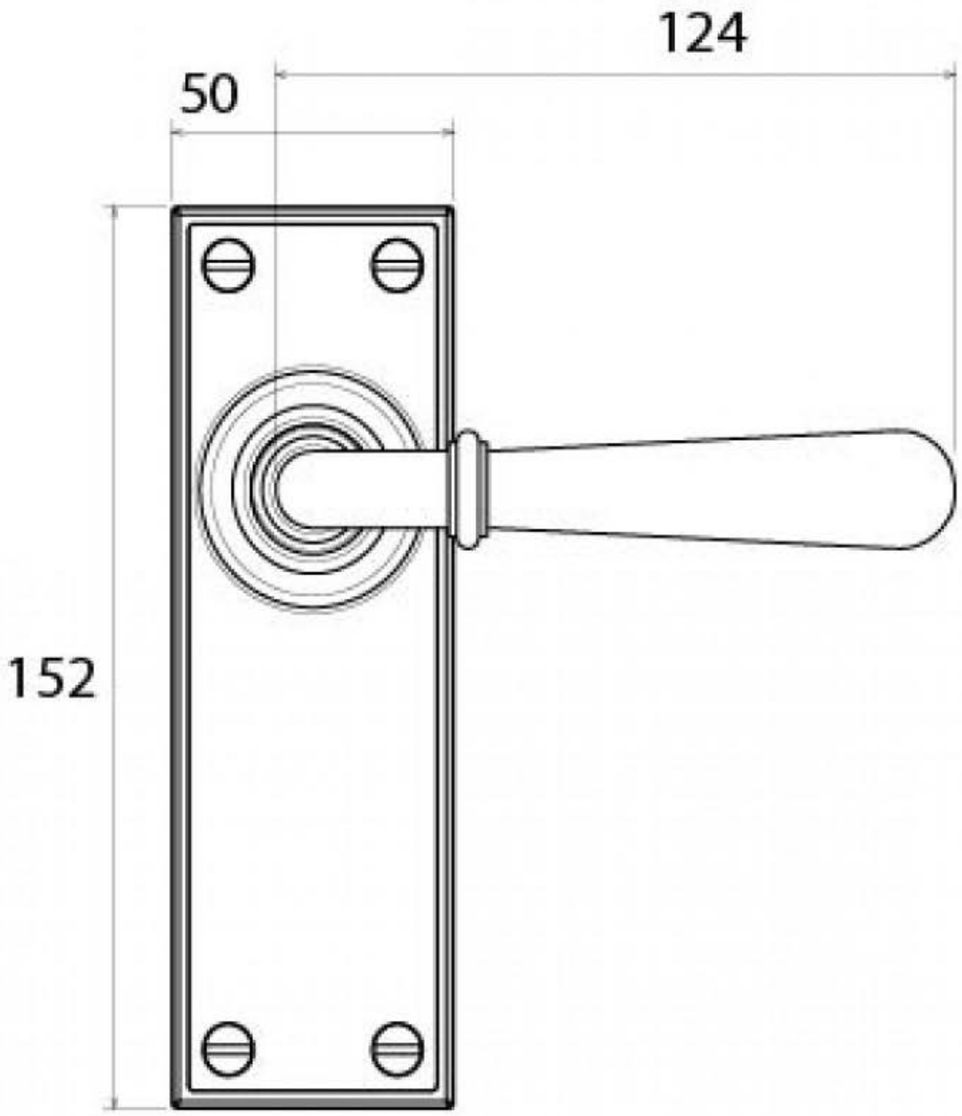

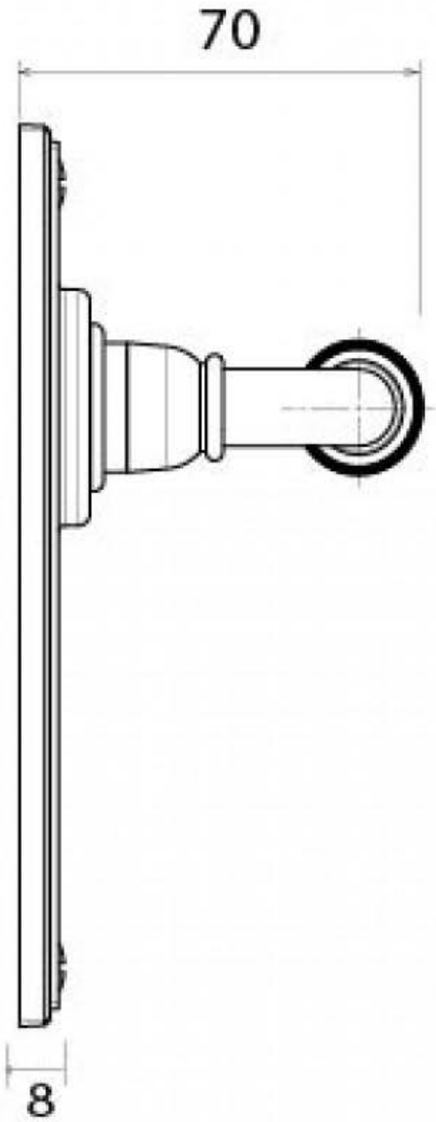

SPINDLE

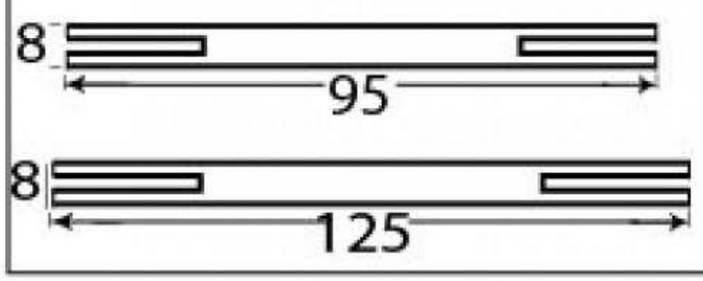

HANDFORGED
TRADITIONAL
IRONMONGERY

Due to the hand crafted nature of our products all measurements are approximate and should be used as a guide only