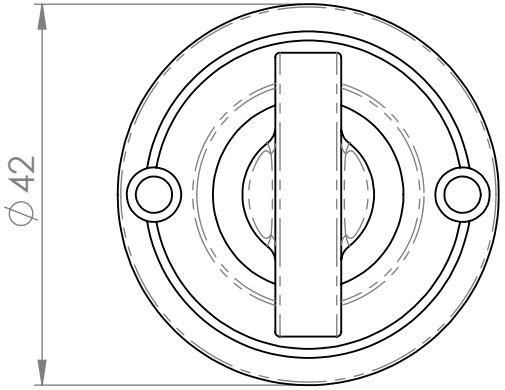

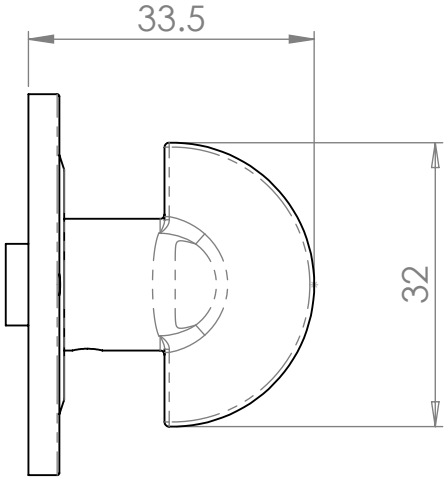

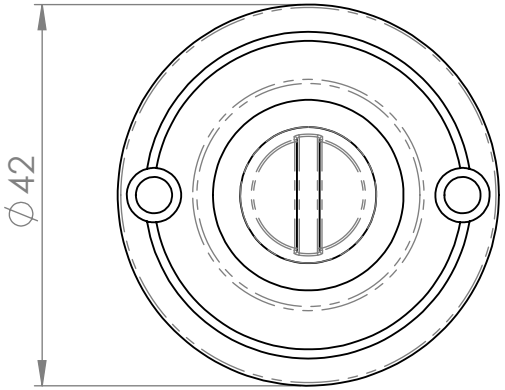

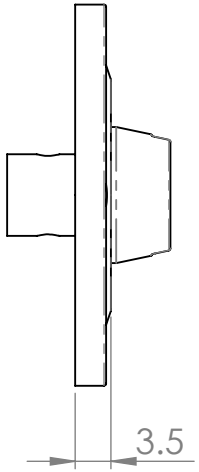

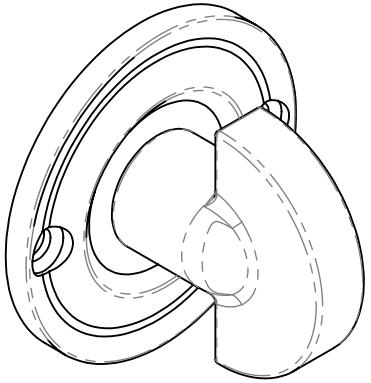

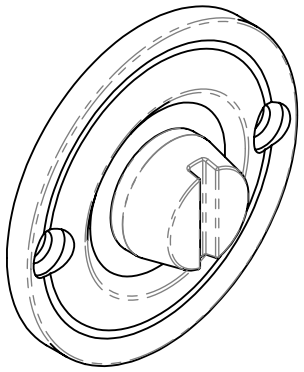

DELAMAIN
CARLISLE BRASS

DK13